Táto pamäť ďalej obsahuje predprogramovanú jedinečnú EUI-48 adresu. Je organizovaná ako dva 128x8-bitové bloky a komunikuje pomocou sériového rozhrania I2C o max. CLK freq. 400kHz.

Vlastnosti

- Pre-programmed Globally Unique, 48-bit Node Address
- Compatible with EUI-48™ and EUI-64™
- Single Supply with Operation Down to 1.7V
- Low-Power CMOS Technology: - Read current 1 mA, max. - Standby current 1 uA, max.
- 2-Wire Serial Interface, I2C™ Compatible
- Schmitt Trigger Inputs for Noise Suppression
- Output Slope Control to Eliminate Ground Bounce

- 100 kHz and 400 kHz Clock Compatibility
- Page Write Time 3 ms, typical
- Self-Timed Erase/Write Cycle
- Page Write Buffer: - 16-byte page
- ESD Protection >4,000V
- More than 1 Million Erase/Write Cycles
- Data Retention >200 Years
- Factory Programming Available
- Available Packages: - 8-lead SOIC and 6-lead SOT-23
- Pb-free and RoHS Compliant
- Temperature Ranges: - Industrial (I): -40°C to +85°C
- Up to 3 Address Pins

Blokové zapojenie

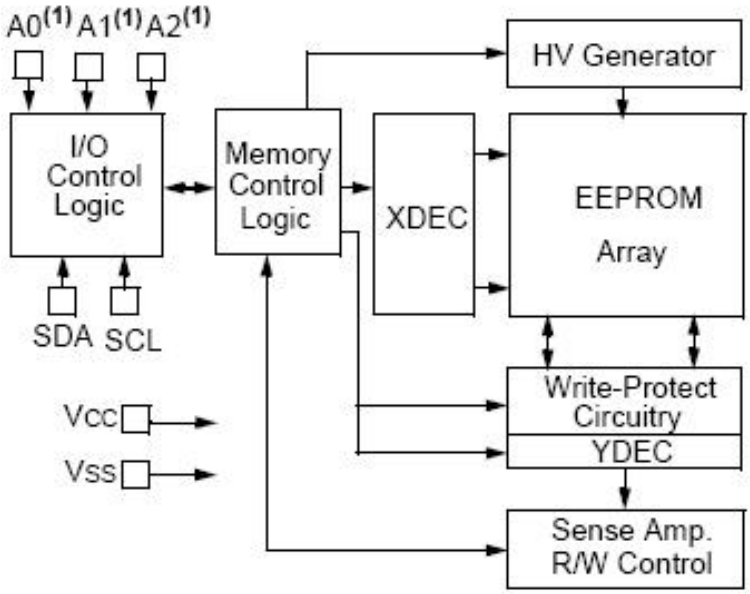

Note 1: Pins A0, A1 and A2 are not available on the 24AA02E48.

Zapojenie púzdier

Package Types (24AA02E48)

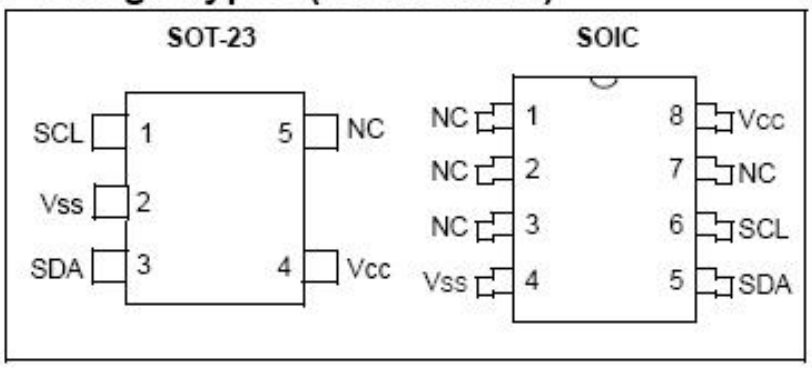

Package Types (24AA025E48)

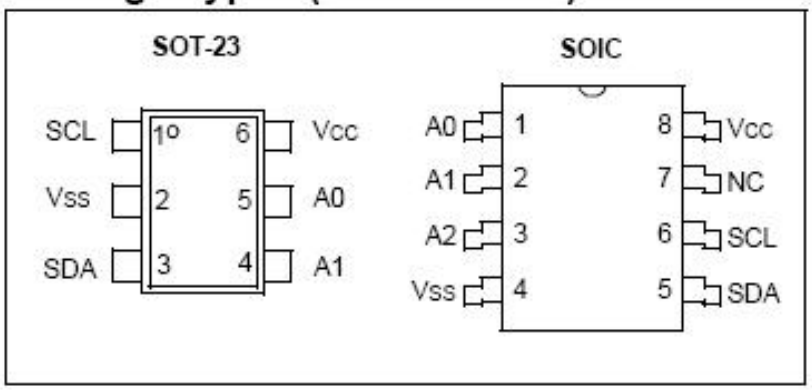

Cena

začína od 0,28 USD pre pamäte v 6-pinovom púzdre SOT-23 a 8-pinové SOIC (kusové množstvá)

Odkazy

Homepage

24AA02E48/24AA025E48 2K I2C Serial EEPROM with EUI-48 Node Identity

Distribúcia

viď. Adresár

48-bit Extended Unique Identifier (EUI-48)

wikipedia napísal ...

The EUI-48 is an identifier that is formed by concatenating the 24-bit OUI with a 24-bit extension identifier that is assigned by the organization that purchased the OUI – the resulting identifier is generally represented as a set of octets separated by dashes (hexadecimal notation) or colons (bit-reversed notation) as in FF-FF-FF-FF-FF-FF or FF:FF:FF:FF:FF:FF, as a string of 6 bytes as in {FF,FF,FF,FF,FF,FF}, or as a base 16 number as in FFFFFFFFFFFF.
src: Wikipedia

IEEE - Guidelines for use of a 48-bit Extended Unique Identifier (EUI-48™)